Nuclear Instruments and Methods in Physics Research A 649 (2011) 84–86

Contents lists available at ScienceDirect

Nuclear Instruments and Methods in Physics Research A

journal homepage: www.elsevier.com/locate/nima

EPICS oscilloscope for time-resolved data acquisition

G. Jackson Williams [a,b], Michael A. Watson [a], Dohn A. Arms [b], Timothy M. Mooney [b], Donald A. Walko [b], Eric C. Landahl [a,*]

[a] Department of Physics, DePaul University, 2219 N Kenmore, Chicago, IL 60614, USA
[b] Advanced Photon Source, Argonne National Laboratory, 9700 S. Cass Ave., Argonne, IL 60439, USA

ARTICLE INFO

Available online 5 January 2011

Keywords:
X-ray diffraction
Time-resolved
Synchrotron
Pump-probe
Oscilloscope
Avalanche photodiode
APD
EPICS
Ultrafast laser
Gallium arsenide

ABSTRACT

The Sector 7 undulator beamline (7 ID) of the Advanced Photon Source (APS) is dedicated to time-resolved X-ray research [1]. Silicon avalanche photodiodes (APDs) are used as the primary point detector for time-resolved Bragg diffraction experiments for their fast recovery time (<100 ns) and ability to observe single photon events. For experiments with high photon flux ($\geq 10^5$ photons/s) at the detector, however, deadtime corrections to the counting statistics become appreciable [2]. Common practice has been to attenuate the monochromatic beam entering the experimental hutch to an appropriately low flux [3]. For these high-flux experiments, an APD operated in proportional mode is a better detector choice due to a large dynamic range and linearity. With the ZT4212 ZTEC, EPICS based oscilloscope, the operating procedure to use an APD in proportional mode has been improved. This article shows the setup and operating procedure for this oscilloscope and demonstrates its application to measuring time-resolved rocking curves of laser excited semiconductors.

© 2011 Elsevier B.V. All rights reserved.

1. Introduction

There is increasing interest in exploiting the inherent pulsed nature of synchrotron sources to record atomic motions in a repetitive pump-probe approach [3–6]. In particular, avalanche photodiodes (APDs) are now widely available, which can distinguish individual X-ray pulses in most operating modes. For many applications, large numbers of X-ray photons are incident upon the APD during each bunch, motivating their use in a "proportional" rather than "photon counting" detection mode. Unfortunately, APDs operated in proportional mode experience significant nonlinearites in response—the height, width, and baseline all change as a function of X-ray intensity, as well as varying with the APD bias and amplifier gain. Although many early time-resolved X-ray measurements relied on gated integration to extract a single-bunch intensity measurement from an APD [7], there are many benefits to digitizing the entire output waveform to correct for detector nonlinearities, avoid gated integrator baseline drift, and record longer histories of detector response to track sample behavior over longer timescales.

The data acquisition approach chosen in proportional mode detection becomes critical for experiments using relatively high repetition rate excitations such as kHz repetition rate high power lasers. In these experiments, the repetitive excitations should be averaged to reduce noise before the data is saved. Unfortunately, most benchtop oscilloscopes provide maximum trigger rates near 100 Hz and have limited record length and slow data transfer. We have therefore implemented an Experimental Physics and Industrial Control System (EPICS) based oscilloscope manufactured by ZTEC that circumvents these limitations and is completely programmable without the need for developing a customized device driver. Here we report on the use of this device for recording proportional mode, bunch-resolved APD data for time-resolved X-ray diffraction experiments and demonstrate the recovery of low-noise, real-time, high dynamic range measurements using the digital waveform processing permitted by this approach.

2. Experimental configuration

2.1. APD proportional mode operation

The ability to count single photons is a product of an APD being biased to nearly the breakdown voltage of silicon. If the bias is reduced from this threshold, silicon acts as a photodiode and records an output proportional to the number of incident photons. Proportional mode detection allows for a time dependent voltage trace to be recorded and analyzed, requiring the use of a high-speed transient digitizer, oscilloscope, or gated integrator.

Operating an APD in proportional detection mode to measure strong diffraction reflections offers a significant advantage over photon counting where the signal may have to be significantly attenuated. Importantly, the full flux of the X-ray beam may now

* Corresponding author.
E-mail address: elandahl@depaul.edu (E.C. Landahl).

0168-9002/$ - see front matter © 2011 Elsevier B.V. All rights reserved.
doi:10.1016/j.nima.2010.12.243

be used, reducing the error on measurements to the level of noise on the detector and the 8-bit oscilloscope with averaging (measured noise level of 0.1 mV RMS out of a ~100 mV peak response averaged for $t=1$ s at a trigger separation of $\tau=1$ ms). This signal-to-noise (SNR) ratio of 10^3 compares extremely favorably for the same experiment conducted in photon counting mode at the optimum observed deadtime count rate ($N_o=0.475/\tau$) for a bunch resolving, isolated deadtime detector (see Eqs. 3 and 7 of Ref. [8])

$$\mathrm{SNR}_{counting}=(1-\tau N_o)\frac{\ln(1-\tau N_o)}{\tau}\sqrt{\frac{t}{N_o}}\approx\frac{1}{2}\sqrt{\frac{t}{\tau}}\approx 16 \quad (1)$$

2.2. Implementation for time-resolved X-ray diffraction

The APS 7ID time-resolved X-ray diffraction instrument was modified to use proportional mode detection and the ZTEC oscilloscope as shown in Fig. 1. The same APD (Perkin Elmer C30703 with home-built amplifier electronics) can be used in both proportional and photon counting mode depending on the high voltage bias (200 and 310 V, respectively). The bias voltage in proportional mode may be adjusted to maintain a linear response at differing X-ray energies or intensities. For time-resolved measurements using high power pulsed lasers, it is necessary to tightly wrap the detector with black cloth to ensure that the laser light (~10^{17} photons/pulse) does not contaminate the X-ray measurements. The APD was mounted on the two-theta arm of a six-circle Huber diffractometer, and a gallium arsenide (1 0 0) wafer was aligned to the center of the horizontally focused X-ray beam at 10 keV. The crystal was oriented and rocking curves were measured around the (4 0 0) reflection.

A 2 mJ, 50 fs, 800 nm center wavelength titanium:sapphire laser pulse was adjusted to strike the X-ray spot on the sample in between two successive X-ray pulses. The laser repetition rate was 1 kHz, and was synchronized to the storage ring. An EPICS controlled delay generator (SRS DG 535) was used to provide a trigger to the oscilloscope at a fixed delay to the arrival of the laser pulse. An upstream APD pointed towards a scattering foil (Fig. 1) in photon counting mode was configured as a normalization detector. The APS bunch pattern (which is uneven and changes due to top-up of the electron beam current) repeats at every $\tau=3.68$ μs, and therefore the SNR for this normalization detector when adjusted to the optimum count rate as given by Eq. (1) is 255, which is comparable to the SNR from the proportional mode detector limited by the laser repetition rate to 1 kHz.

2.3. Oscilloscope configuration

The ZT4212 is a 4-channel digital LXI oscilloscope that communicates through a LAN 10/100 connection assigned an IP address. A soft IOC runs externally to the oscilloscope that may be controlled from any terminal. Instrument information is posted through the video out (VGA) port in the back. The instrument hosts a webpage at this address with all current information about the hardware, network configuration, and EPICS configuration. From this site, the "PV File" can be accessed, which describes the EPICS process variable fields and values that control all oscilloscope settings. Waveform averaging is entirely accomplished on the oscilloscope itself. The ZTEC waveform capture sequence involves three independent processes—grab a new waveform (run), update *x*-axis (time), and update *y*-axis (voltage response). To reduce the number of operations for the oscilloscope, these PVs should only be processed when called.

3. Performance

The APD response is digitized and captured by the ZTEC oscilloscope, which is triggered by the laser system (also synchronized to the storage ring). The APD signal is averaged over 1000 triggers at 1 kHz before the scan record retrieves the waveform, which is shown in Fig. 2. The analysis of the waveform may best be done on the fly to reduce the amount of data stored and allow the experimenter to obtain real-time feedback on the progress of an experiment. The waveform is directly imported as an array, which is then parsed into different bunches using built-in EPICS userArrayCalcs. X-ray intensity of a given bunch is extracted as the

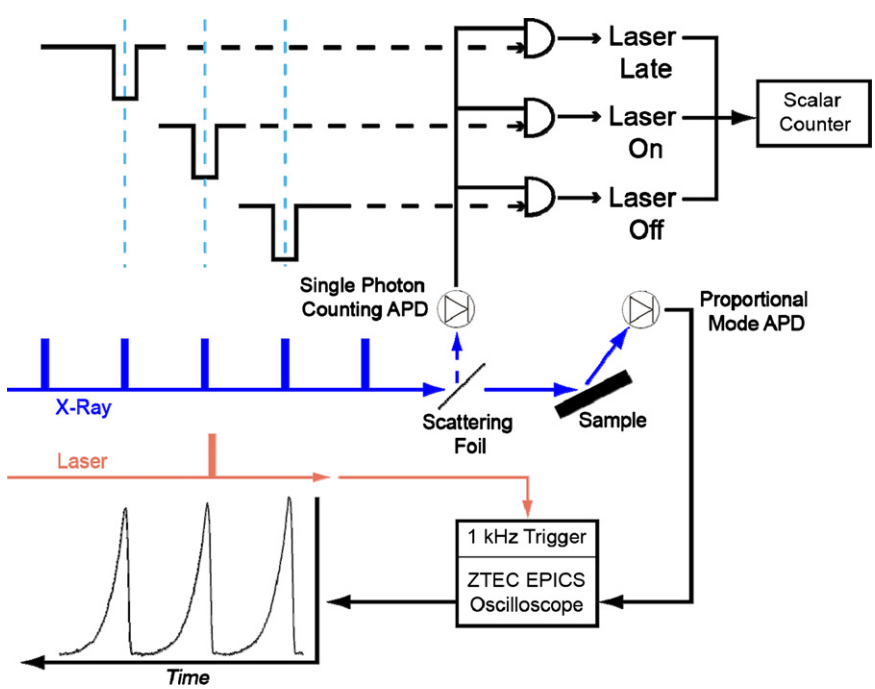

Fig. 1. Experimental configuration to measure time-resolved rocking curves following ultrafast laser excitation of a gallium arsenide sample using a proportional mode APD.

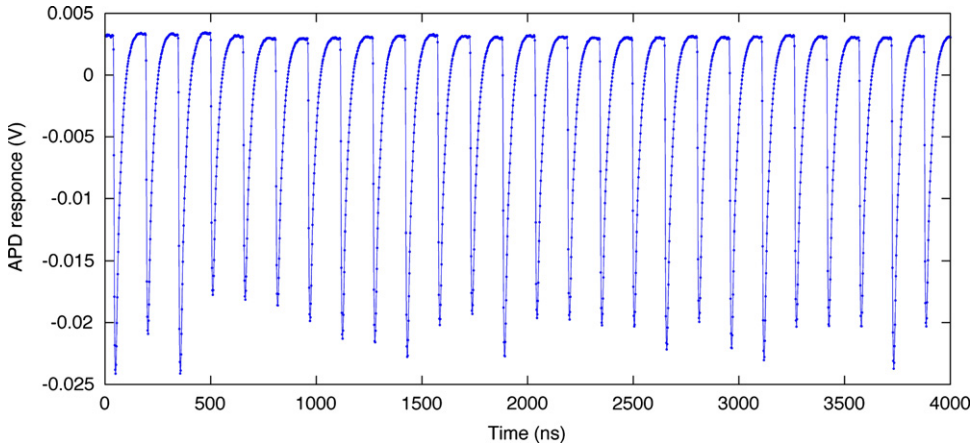

Fig. 2. Waveform output in APS standard 24 bunch mode. Twenty-six bunches are shown, so the first and second to last pulse correspond to the same electron bunches that are separated by 3.68 μs. The laser was shuttered for this measurement, but would normally strike the sample between the first two bunches shown.

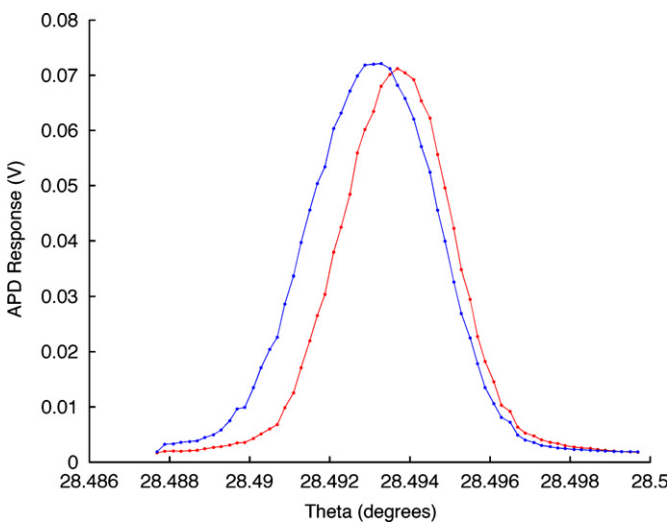

Fig. 3. Time-resolved rocking curves from laser excited gallium arsenide. Curves were recorded simultaneously at 1 s/point, 1 kHz trigger rate. Right curve represents the unstrained crystal before the laser strikes the sample; left curve shows a shifted and distorted rocking curve from laser-induced strain. Due to bunch duration of APS, each curve has a time resolution of 100 ps.

difference between the maximum and minimum of the parsed array, and this value is recorded as a detector. More sophisticated approaches to analyzing the waveforms (e.g. smoothing functions, curve fitting, or integration) have not resulted in improved SNRs in our experiments. We expect that the use of a higher resolution ADC may improve the SNR for some measurements.

With many benchtop oscilloscopes, a bottleneck occurs during acquisition of the waveform and upload to the EPICS server. The communication and upload times for the ZTEC oscilloscope are drastically reduced by the native EPICS interface, enabling data collection with only a small ($\sim$0.2 s) delay for each waveform capture. The ZTEC oscilloscope is capable of capturing and uploading waveforms as fast as two waveforms per second, or approximately one waveform per second when averaging across 1000 triggers at kHz rates.

Fig. 3 shows a full time-resolved rocking curve for gallium arsenide. The bunch resolving capability of the detector allows the diffraction peak shape before and after the laser strikes the sample to be recorded simultaneously. The smooth rocking curves should allow for diffraction peak-shape analysis in addition to centroid determination, which is generally the only type of analysis possible with the rocking curves generated by photon counting detectors in time-resolved diffraction experiments [3,4].

Acknowledgements

We acknowledge many useful discussions with the technical staff at ZTEC. We thank S. Ross at the APS for the construction and loan of the APD, as well as the staff at APS 7ID for their assistance. This work was supported in part by an award from the Research Corporation for Science Advancement and in part by the DePaul University College of Liberal Arts and Sciences. Use of the Advanced Photon Source was supported by the U.S. Department of Energy, Office of Science, Office of Basic Energy Sciences, under Contract no. DE-AC02-06CH11357.

References

[1] E.M. Dufresne, et al., Time-resolved research at the Advanced Photon Source beamline 7ID, in: Proceedings of SRI 2009, AIP 1234, 2010, pp. 181–184.
[2] D.A. Walko, D.A. Arms, E.C. Landahl, Journal of Synchrotron Radiation 15 (2008) 612.
[3] Y.M. Sheu, et al., Physical Review B 78 (2008) 045317.
[4] M. Highland, et al., Physical Review B 76 (2007) 075337.
[5] M. Trigo, et al., Physical Review Letters 101 (2008) 025505.
[6] L. Young, et al., Physical Review Letters 97 (2006) 083601.
[7] D.A. Reis, et al., Physical Review Letters 86 (2001) 3072.
[8] D.A. Walko, et al., Optimal countrates for deadtime corrections, in: Proceedings of SRI 2009, AIP 1234, 2010, pp. 856–859.