REVISIONS					
ZONE	REV	DESCRIPTION	BY	APPROVED	DATE

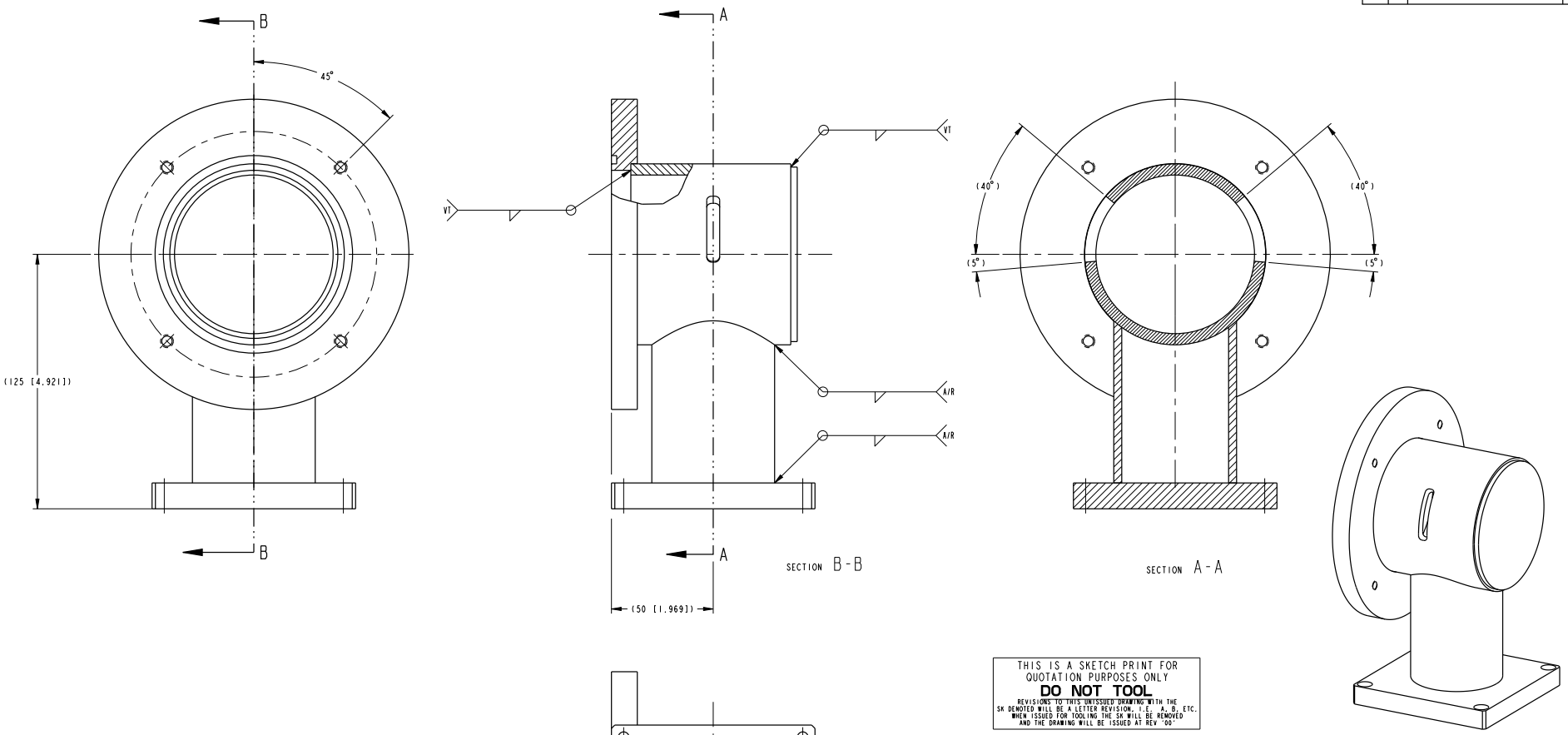

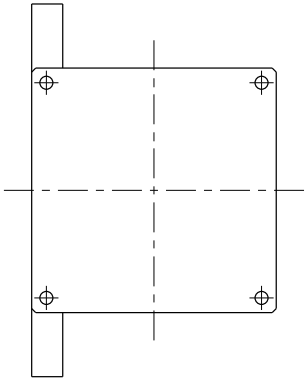

THIS IS A SKETCH PRINT FOR QUOTATION PURPOSES ONLY

DO NOT TOOL

REVISIONS TO THIS UNISSUED DRAWING WITH THE SK DENOTED WILL BE A LETTER REVISION, I.E. A, B, ETC. WHEN ISSUED FOR TOOLING THE SK WILL BE REMOVED AND THE DRAWING WILL BE ISSUED AT REV '00'

NOTES -

MACHINING -

THIS COMPONENT IS INTENDED FOR ULTRA HIGH VACUUM (UHV) SERVICE. THE USE OF SILICONE, SULPHUR, PHOSPHORUS, OR HALOGEN BASED CUTTING FLUIDS AND ABRASIVES IS PROHIBITED. USE TRIMSOL OR APPROVED EQUIVALENT LUBRICANT. FOR COMPLETE SPECIFICATIONS ON MACHINING, VACUUM REQUIREMENTS, TESTING AND DELIVERY PREPERATION. SEE ANL DOCUMENT NO. 410201-00095.

WELDING -

ALL WELDS ARE GAS TUNGSTEN ARC WELDS (GTAW). FOR COMPLETE WELDING SPECIFICATIONS, SEE SAE DOCUMENT NO. AMS 2865D

FOR COMPLETE SPECIFICATIONS ON WELDING, SEE SAE DOCUMENT AMS 2685C.

CLEAN FOR 10^{-9} TORR UHV SERVICE PRIOR TO WELDING.

TESTING -

VACUUM LEAK CHECK; NO DETECTABLE LEAKS WHEN TESTING AT 2 X 10^{-9} STC CC/SEC OF HELIUM LEVEL.

ITEM	DRAWING / PART NUMBER	REV	NOMENCLATURE OR DESCRIPTION	MATERIAL / SPEC.	QTY
5	430802-100005	00	SUPPORT TUBE	ALUMINUM	1
4	430802-100004	00	SUPPORT BASE	ALUMINUM	1
3	430802-100003	00	END CAP	ALUMINUM	1
2	430802-100002	00	FLANGE	ALUMINUM	1
1	430802-100001	00	CHAMBER TUBE	ALUMINUM	1

PARTS LIST / BILL OF MATERIALS

REMOVE ALL BURRS AND BREAK SHARP EDGES .03" MAX. SURFACE TEXTURE IN ACCORDANCE WITH LATEST ASME B46.1-2002 DIMENSIONING AND TOLERANCING IN ACCORDANCE WITH LATEST ASME Y14.5M-1994

ELECTRONIC FILE NAME: A5265400

MODEL NAME: 430802-100010

UNLESS OTHERWISE SPECIFIED ALL DIMENSIONS ARE IN INCHES

TOLERANCES

DECIMALS	ANGULAR
.X ± .1	± 0.5°
.XX ± .03	
.XXX ± .005	

SURFACE ROUGHNESS 125

DRAFTER: O. SCHMIDT — DATE: 16-Jan-14

CHECKER: — DATE:

DESIGNER: - — DATE: 16-Jan-14

RESPONSIBLE ENGINEER: O. SCHMIDT — DATE:

GROUP LEADER/PROJECT LEADER/CAM: A. SANDY — DATE:

APPROVER: B. RUSTHOVEN — DATE:

RELEASE LEVEL: WIP — MODEL VER: 2 — DRWG VER: 3

MATERIAL: ALUMINUM

Argonne NATIONAL LABORATORY

THIS DRAWING IS THE PROPERTY OF

ADVANCED PHOTON SOURCE

WBS DESCRIPTION:

EXPERIMENTAL FACILITIES
BEAMLINE ID
SECTOR 8 ID
INSTRUMENTATION

TITLE: SAMPLE CHAMBER WELDMENT

SIZE: D — DRAWING NUMBER: 430802-100010 — SHT. DES. — REV. 00

SCALE: 1:1 — FSCM No: 0HR45 — DO NOT SCALE DRAWING — SHEET 1 OF 1